[Full VHDL code] Matrix Multiplication Design using VHDL

VHDL code for Matrix multiplication is presented. This VHDL project is aimed to develop and implement a synthesizable matrix multiplier core, which is able to perform matrix calculation for matrices with the size of 32x32.

Each component of the matrices is 16-bit unsigned integer. The core is implemented on Xilinx FPGA Spartan-6 XC6SLX45-CSG324-3. Both behavior and post-route verification are completed. The simulated result is accurately compared to Matlab implementation result.

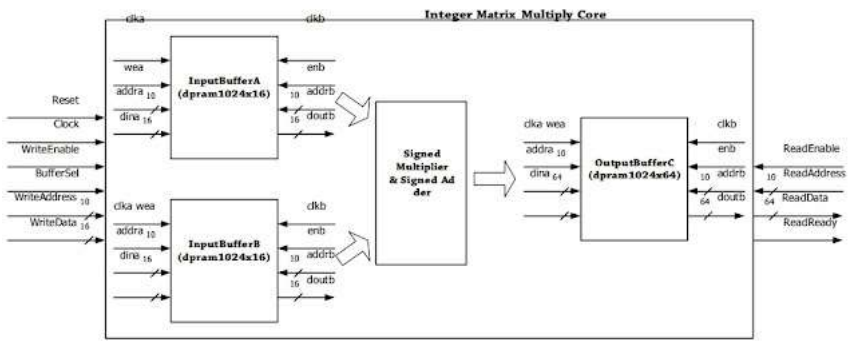

Block diagram of the design core

The design core is based on the reference design of matrix addition, which input and output buffers are generated by Xilinx Core Generator to save input and output data. The main work is the block to calculate matrix multiplication. Based on the theory of matrix multiplication, the matrix multiplication is done by the following equation:

$$Cij = ai1 \times b1j + ai2 \times b2j + ai3 \times b3j + \ldots + ai32 \times b32j;\ i = 1, 2, 3, \ldots, 32;\ j = 1, 2, 3, \ldots, 32$$

To calculate cij , during the state of “stReadBufferAB”, we have to read out all 32 columns of row i and 32 the rows of column j, and do multiplication and accumulation like the equation. Furthermore, we add one more state “stSaveData” to the FSM of the reference core which is aimed to save the accumulated data before going to the next state of “stWriteBufferC”.

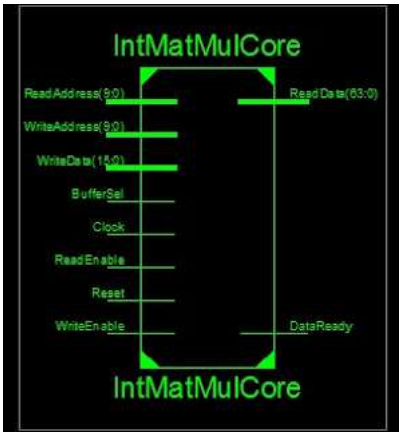

Block interface of the design core

VHDL top level code for the matrix multiplier:

```
-- fpga4student.com FPGA projects, Verilog projects, VHDL projects
-- VHDL project: VHDL code for matrix multiplcation
library ieee;
use ieee.std_logic_1164.all;
use ieee.numeric_std.all;
use IEEE.STD_LOGIC_UNSIGNED.ALL;
```

```
-- Required entity declaration
entity IntMatMulCore is
     port(
          Reset, Clock,      WriteEnable, BufferSel:      in std_logic;
          WriteAddress: in std_logic_vector (9 downto 0);
          WriteData:           in std_logic_vector (15 downto 0);
          ReadAddress:      in std_logic_vector (9 downto 0);
          ReadEnable:      in std_logic;
          ReadData:           out std_logic_vector (63 downto 0);
          DataReady:           out std_logic
     );
end IntMatMulCore;
architecture IntMatMulCore_arch of IntMatMulCore is
-- fpga4student.com FPGA projects, Verilog projects, VHDL projects
COMPONENT dpram1024x16
 PORT (
  clka : IN STD_LOGIC;
  wea : IN STD_LOGIC_VECTOR(0 DOWNTO 0);
  addra : IN STD_LOGIC_VECTOR(9 DOWNTO 0);
  dina : IN STD_LOGIC_VECTOR(15 DOWNTO 0);
  clkb : IN STD_LOGIC;
      enb : IN STD_LOGIC;
  addrb : IN STD_LOGIC_VECTOR(9 DOWNTO 0);
  doutb : OUT STD_LOGIC_VECTOR(15 DOWNTO 0)
 );
END COMPONENT;
-- fpga4student.com FPGA projects, Verilog projects, VHDL projects
COMPONENT dpram1024x64
 PORT (
  clka : IN STD_LOGIC;
  wea : IN STD_LOGIC_VECTOR(0 DOWNTO 0);
  addra : IN STD_LOGIC_VECTOR(9 DOWNTO 0);
  dina : IN STD_LOGIC_VECTOR(63 DOWNTO 0);
  clkb : IN STD_LOGIC;
  enb : IN STD_LOGIC;
  addrb : IN STD_LOGIC_VECTOR(9 DOWNTO 0);
  doutb : OUT STD_LOGIC_VECTOR(63 DOWNTO 0)
 );
END COMPONENT;
-- fpga4student.com FPGA projects, Verilog projects, VHDL projects
type     stateType is (stIdle, stWriteBufferA, stWriteBufferB, stReadBufferAB, st
signal presState: stateType;
signal nextState: stateType;
signal iReadEnableAB, iCountReset,iCountEnable, iCountEnableAB,iCountResetAB: std
signal iWriteEnableA, iWriteEnableB, iWriteEnableC: std_logic_vector(0 downto 0);
signal iReadDataA, iReadDataB: std_logic_vector (15 downto 0);
signal iWriteDataC: std_logic_vector (63 downto 0);
signal iCount, iReadAddrA, iReadAddrB,iRowA : unsigned(9 downto 0);
signal CountAT,CountBT:unsigned(9 downto 0);
signal iColB:unsigned(19 downto 0);
signal irow,icol,iCountA,iCountB: unsigned(4 downto 0);
signal iCountEnableAB_d1,iCountEnableAB_d2,iCountEnableAB_d3: std_logic;
begin
     --Write Enable for RAM A
     iWriteEnableA(0) <= WriteEnable and BufferSel;
     --Write Enable for RAM B
     iWriteEnableB(0) <= WriteEnable and (not BufferSel);
-- fpga4student.com FPGA projects, Verilog projects, VHDL projects
     --Input Buffer A Instance
          InputBufferA : dpram1024x16
          PORT MAP (
               clka => Clock,
               wea  => iWriteEnableA,
```

```
                addra => WriteAddress,
                dina => WriteData,
                clkb      => Clock,
                enb     => iReadEnableAB,
                addrb => std_logic_vector(iReadAddrA),
                doutb => iReadDataA
            );
-- fpga4student.com FPGA projects, Verilog projects, VHDL projects
     InputBufferB : dpram1024x16
            PORT MAP (
                clka => Clock,
                wea  => iWriteEnableB,
                addra => WriteAddress,
                dina => WriteData,
                clkb      => Clock,
                enb     => iReadEnableAB,
                addrb => std_logic_vector(iReadAddrB),
                doutb => iReadDataB
            );
-- fpga4student.com FPGA projects, Verilog projects, VHDL projects
     OutputBufferC : dpram1024x64
            PORT MAP (
                clka      => Clock,
                wea      => iWriteEnableC,
                addra => std_logic_vector(iCount),
                dina      => iWriteDataC,
                clkb      => Clock,
                enb      => ReadEnable,
                addrb => ReadAddress,
                doutb => ReadData
            );
     process(Clock,Reset)
     begin
     if(rising_edge(Clock)) then
     if(Reset='1') then
     iCountEnableAB_d1 <= '0';
     iCountEnableAB_d2 <= '0';
     else
     iCountEnableAB_d1 <= iCountEnable;
     iCountEnableAB_d2 <= iCountEnableAB_d1;
     end if;
     end if;
     end process;
     iCountEnableAB_d3 <= (not iCountEnableAB_d2) AND iCountEnableAB_d1 ;
-- fpga4student.com FPGA projects, Verilog projects, VHDL projects
     process (Clock)
     begin
            if rising_edge (Clock) then
                if(Reset='1') then
                    iWriteDataC <= (others => '0');
                elsif(iWriteEnableC(0)='1') then
                    iWriteDataC <= (others => '0');
                elsif(iCountEnableAB_d3='1') then
                    iWriteDataC <= (others => '0');
                elsif(iReadEnableAB='1') then
                    iWriteDataC <= iWriteDataC + std_logic_vector(signed(iReadDat
                end if;
            end if;
     end process;
-- fpga4student.com FPGA projects, Verilog projects, VHDL projects
      process (Clock)
     begin
            if rising_edge (Clock) then
```

```
                if Reset = '1' then
                     presState <= stIdle;
                     iCountA <= (others=>'0');
                     iCountB <= (others=>'0');
                else
                     presState <= nextState;
                     if iCountResetAB = '1' then
                          iCountA <= (others=>'0');
                          iCountB <= (others=>'0');
                     elsif iCountEnableAB = '1' then
                          iCountA <= iCountA + 1;
                          iCountB <= iCountB + 1;
                     end if;
                end if;
                if iCountReset = '1' then
                     iCount <= (others=>'0');
                elsif iCountEnable = '1' then
                     iCount <= iCount + 1;
                end if;
           end if;
      end process;
      iRowA <= iCount srl 5;
      iColB <= ("0000000000"&iCount) - iRowA*32;
      irow <= iRowA(4 downto 0);
      icol <= iColB(4 downto 0);
      CountAT <= "00000"&iCountA;
      CountBT <= "00000"&iCountB;
      iReadAddrA <= (iRowA sll 5)+CountAT;
      iReadAddrB <= (CountBT sll 5)+ iColB(9 downto 0);
-- fpga4student.com FPGA projects, Verilog projects, VHDL projects
      process (presState, WriteEnable, BufferSel, iCount, iCountA, iCountB)
      begin
           -- signal defaults
           iCountResetAB <= '0';
           iCountReset <= '0';
           iCountEnable <= '1';
           iReadEnableAB <= '0';
           iWriteEnableC(0) <= '0';
           Dataready <= '0';
           iCountEnableAB <= '0';
           case presState is
                when stIdle =>
                     if (WriteEnable = '1' and BufferSel = '1') then
                          nextState <= stWriteBufferA;
                     else
                          iCountReset <= '1';
                          nextState <= stIdle;
                     end if;
                when stWriteBufferA =>
                     if iCount = x"3FF" then
                          report "Writing A";
                          iCountReset <= '1';
                          nextState <= stWriteBufferB;
                      else
                          nextState <= stWriteBufferA;
                     end if;
                when stWriteBufferB =>
                     report "Writing B";
                     if iCount = x"3FF" then
                          iCountReset <= '1';
                          nextState <= stReadBufferAB;
                      else
                          nextState <= stWriteBufferB;
```

```
                    end if;
                when stReadBufferAB =>
                    iReadEnableAB <= '1';
                    iCountEnable <= '0';
                    report "CalculatingAB";
                    if iCountA = x"1F" and iCountB = x"1F" then
                        nextState <= stSaveData;
                        report "Calculating";
                        iCountEnableAB <= '0';
                        iCountResetAB <= '1';
                    else
                        nextState <= stReadBufferAB;
                        iCountEnableAB <= '1';
                        iCountResetAB <= '0';
                    end if;
                when stSaveData =>
                    iReadEnableAB <= '1';
                    iCountEnable <= '0';
                    nextState <= stWriteBufferC;
                when stWriteBufferC =>
                    iWriteEnableC(0) <= '1';
                    report "finish 1 component";
                    if iCount = x"3FF" then
                        iCountReset <= '1';
                        nextState <= stComplete;
                     else
                        nextState <= stReadBufferAB;
                    end if;
                when stComplete =>
                    DataReady <= '1';
                    nextState <= stIdle;
            end case;
        end process;
    end IntMatMulCore_arch;
```

Below is the testbench code to read matrix inputs from text files and write the result to an output text file:

```
-- VHDL project: VHDL code for matrix multiplication
-- fpga4student.com FPGA projects, Verilog projects, VHDL projects
-- Testbench VHDL code for matrix multiplication
 library ieee;
 use ieee.std_logic_1164.all;
 use ieee.std_logic_textio.all;
 use ieee.numeric_std.all;
 use std.textio.all;
 entity tb_IntMatMultCore is
 end tb_IntMatMultCore;
 architecture behavior of tb_IntMatMultCore is
 component IntMatMulCore
      port(
           Reset, Clock,      WriteEnable, BufferSel:      in std_logic;
           WriteAddress: in std_logic_vector (9 downto 0);
           WriteData:           in std_logic_vector (15 downto 0);
           ReadAddress:      in std_logic_vector (9 downto 0);
           ReadEnable:      in std_logic;
           ReadData:           out std_logic_vector (63 downto 0);
           DataReady:           out std_logic
      );
 end component;
 signal tb_Reset : std_logic := '0';
 signal tb_Clock : std_logic := '0';
 signal tb_BufferSel : std_logic := '0';
 signal tb_WriteEnable : std_logic := '0';
```

```
signal tb_WriteAddress : std_logic_vector(9 downto 0) := (others => '0');
signal tb_WriteData : std_logic_vector(15 downto 0) := (others => '0');
signal tb_ReadEnable : std_logic := '0';
signal tb_ReadAddress : std_logic_vector(9 downto 0) := (others => '0');
signal tb_DataReady : std_logic;
signal tb_ReadData : std_logic_vector(63 downto 0);
-- Clock period definitions
constant period : time := 100 ns;
begin
-- fpga4student.com FPGA projects, Verilog projects, VHDL projects
     -- Instantiate the Unit Under Test (UUT)
     uut: IntMatMulCore
          PORT MAP (
               Reset                    => tb_Reset,
               Clock                    => tb_Clock,
               WriteEnable          => tb_WriteEnable,
               BufferSel          => tb_BufferSel,
               WriteAddress     => tb_WriteAddress,
               WriteData          => tb_WriteData,
               ReadEnable          => tb_ReadEnable,
               ReadAddress          => tb_ReadAddress,
               ReadData               => tb_ReadData,
               DataReady          => tb_DataReady
   );
 -- Test Bench Statements
     process is
     begin
          --while now <= 10000000000000 * period loop
               tb_Clock <= '0';
               wait for period/2;
               tb_Clock <= '1';
               wait for period/2;
          --end loop;
          --wait;
     end process;
     process is
     begin
          tb_Reset <= '1';
          wait for 10*period;
          tb_Reset <= '0';
          wait;
     end process;
     writingA: process is
          file FIA: TEXT open READ_MODE is "InputA.txt";  -- the input file must
          file FIB: TEXT open READ_MODE is "InputB.txt";  -- the input file must
          variable L: LINE;
          variable tb_MatrixData: std_logic_vector(15 downto 0);
     begin
          tb_WriteEnable <= '0';
          tb_BufferSel <= '1';
          tb_WriteAddress <= "11"&x"FF";
          wait for 20*period;
          READLINE(FIA, L);
          while not ENDFILE(FIA) loop
               READLINE(FIA, L);
               HREAD(L, tb_MatrixData);
               wait until falling_edge(tb_Clock);
               tb_WriteAddress <= std_logic_vector(unsigned(tb_WriteAddress)+1);
               tb_BufferSel <= '1';
               tb_WriteEnable <= '1';
               tb_WriteData <=tb_MatrixData;
          end loop;
          READLINE(FIB, L);
```

```
            while not ENDFILE(FIB) loop
                 READLINE(FIB, L);
                 HREAD(L, tb_MatrixData);
                 wait until falling_edge(tb_Clock);
                 tb_WriteAddress <= std_logic_vector(unsigned(tb_WriteAddress)+1);
                 tb_BufferSel <= '0';
                 tb_WriteEnable <= '1';
                 tb_WriteData <=tb_MatrixData;
            end loop;
            wait for period;
            tb_WriteEnable <= '0';
            wait;
       end process;
 -- fpga4student.com FPGA projects, Verilog projects, VHDL projects
       reading: process is
            file FO: TEXT open WRITE_MODE is "OutputMultC.txt";
            file FI: TEXT open READ_MODE is "OutputMultC_matlab.txt";
            variable L, Lm: LINE;
            variable v_ReadDatam: std_logic_vector(63 downto 0);
            variable v_OK: boolean;
       begin
            tb_ReadEnable <= '0';
            tb_ReadAddress <=(others =>'0');
            ---wait for Mul done
            wait until rising_edge(tb_DataReady);
            wait until falling_edge(tb_DataReady);
            READLINE(FI, Lm);
            Write(L, STRING'("OutputMultC"));
            WRITELINE(FO, L);
            tb_ReadEnable<= '1' ;
            while not ENDFILE(FI) loop
                 wait until rising_edge(tb_Clock);
                 wait for 20 ns;
                 READLINE(FI, Lm);
                 HREAD(Lm, v_ReadDatam);
                 if v_ReadDatam = tb_ReadData then
                      v_OK :=True;
                      report "Matched";
                 else
                      v_OK :=False;
                 end if;
                 HWRITE(L, '0'& tb_ReadData, Left, 10);
                 WRITE(L, v_OK, Right, 10);
                 WRITELINE(FO, L);
                 tb_ReadAddress <= std_logic_vector(unsigned(tb_ReadAddress)+1);
            end loop;
            tb_ReadEnable <= '0';
            assert false report "Simulation Finished" severity failure; -- to stop
            wait;
       end process;
 end;
```

Behavior Simulation for the matrix multiplication design

After finishing the design of the multiplier core, we carry out the behavior simulation for the core. The testbench is reading input A and B, then produce output C and then compare with Matlab result. If the result is 100% compared to Matlab, data in output file “OutputMultC.txt” will be “true”. Otherwise, it will be false.

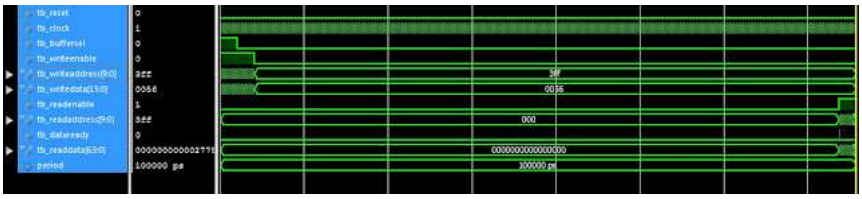

Behavior simulation waveform

After 34816 clock cycles, the matrix multiplication for the matrix with size 32x32 is completed and the signal “dataready” is asserted high. It is reasonable because it would take 32 cycles to calculate each matrix component of the output matrix C. There are also 2 cycles which are saving data and writing data to buffer C for each matrix component. Thus, there are 34 clock cycles being used to calculate one component of matrix C. The size of matrix C is 32x32, then we have the matrix multiplication time is 32x32x34 = 34816 cycles.

The behavior simulation result is correctly compared to Matlab. In fact, the output file “OutputMultC.txt” is all “true”. We also check the memory content of the buffer output and the results are of course similar to Matlab calculation.

Post-route simulation

To perform post-route simulation, we synthesize and get the post translate netlist to be simulated. The synthesis result indicates that the maximum frequency of the clock used for this design is 120.757MHz. It means that the minimum period of the clock is 8.281ns. Thus, the minimum multiplication time for the 32x32 matrixes is 34816x8.281ns = 288.311 us.

The post-route simulation result is accurately similar to the Matlab result and the behavior simulation. Indeed, the output file “OutputMultC.txt” is all “true” as our expectation.

In this project, the matrix multiplication for the matrixes with 32x32 16-bit unsigned integers is implemented on FPGA Spartan6 of Xilinx. The minimum multiplication time for the matrix of 32x32 is 288.311 us.

Recommended VHDL projects:

1. **What is an FPGA? How VHDL works on FPGA**
2. **VHDL code for FIFO memory**
3. **VHDL code for FIR Filter**
4. **VHDL code for 8-bit Microcontroller**
5. **VHDL code for Matrix Multiplication**
6. **VHDL code for Switch Tail Ring Counter**
7. **VHDL code for digital alarm clock on FPGA**
8. **VHDL code for 8-bit Comparator**
9. **How to load a text file into FPGA using VHDL**
10. **VHDL code for D Flip Flop**
11. **VHDL code for Full Adder**
12. **PWM Generator in VHDL with Variable Duty Cycle**
13. **VHDL code for ALU**
14. **VHDL code for counters with testbench**
15. **VHDL code for 16-bit ALU**
16. **Shifter Design in VHDL**
17. **Non-linear Lookup Table Implementation in VHDL**
18. **Cryptographic Coprocessor Design in VHDL**
19. **Verilog vs VHDL: Explain by Examples**
20. **VHDL Code for Clock Divider on FPGA**
21. **How to generate a clock enable signal instead of creating another clock domain**
22. **VHDL code for debouncing buttons on FPGA**
23. **VHDL code for Traffic light controller**
24. **VHDL code for a simple 2-bit comparator**
25. **VHDL code for a single-port RAM**

22. **VHDL code for debouncing buttons on FPGA**
23. **VHDL code for Traffic light controller**
24. **VHDL code for a simple 2-bit comparator**
25. **VHDL code for a single-port RAM**

26. VHDL code for Car Parking System using FSM
27. VHDL coding vs Software Programming
28. VHDL code for MIPS Processor
29. VHDL code for Moore FSM Sequence Detector
30. VHDL code for Seven-Segment Display on Basys 3 FPGA

DMCA PROTECTED

Privacy Policy | Disclaimer | Sitemap | Contact | Advertise Here
Copyright © 2016-2020 FPGA4student.com All Rights Reserved.